FABRICATION ENGINEERING

HORI.VESSEL SADDLE SUPPORT SIZING-TYPE2

DESIGN DATA PGM RUN ***V1.2***

* DESCRIPTION	PV-001		* ITEM NO.	PES21	
* VESSEL I.D	4000	mm	* SHELL TH'K	20	mm
* SADDLE HEIGHT,h	250	mm	*MAX. RIB DISTANCE,A	300	mm
* Dim. "G1"	13	mm	* SADDLE CONTACT ANGLE, ¢1	120	o
* Dim. "G2"	13	mm	* SADDLE WEB THICKNESS	16	mm
* SADDLE PAD THICKNESS	16	mm	* SADDLE PAD WIDTH,Tw	350	mm
* BASE PLATE THICKNESS,Bt	25	mm	* BASE PLATE WIDTH,Bw	300	mm
* RIB THICKNESS,Rt	16	mm	* BASE PLATE LENGTH,BL	3300	mm
* SADDLE PAD EXTENTION, We	50	mm			

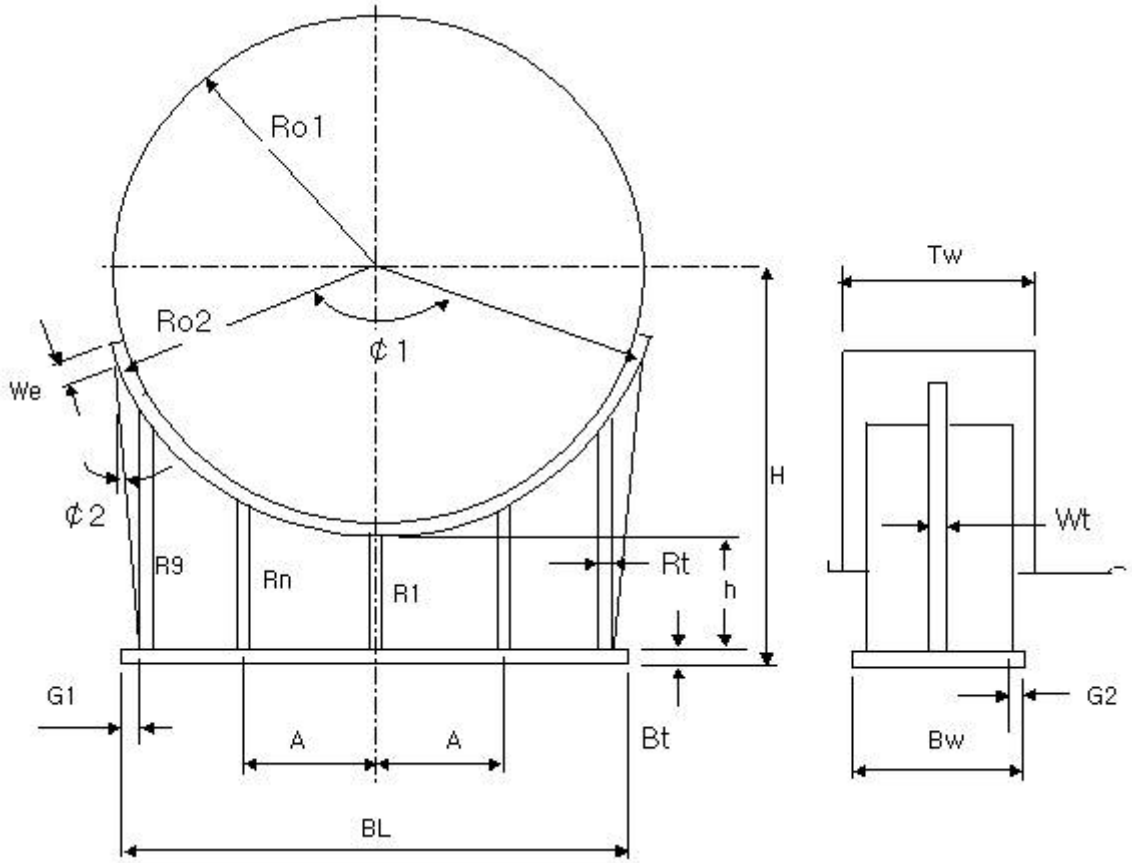

RESULT OF CALCULATION

* Vessel center to bottom of base, H	2,311.00	mm	* Base plate length, BL	3,300	mm
* Vessel outside radius, Ro1	2,020.0	mm	* Saddle pad outside radius, Ro2	2,036.0	mm
* Saddle web		m^2	* Saddle web Arc area		Kg

Arc area(Loss)	2.55		weight(Loss)	320	
* Saddle web side area(Loss)	0.16	m^2	* Saddle web side area weight(Loss)	20	Kg
* Saddle web side slant angle, ¢2	5.7	o	* Saddle web side slant length,WL	1,274	mm
* Saddle Net weight	806	Kg	* Saddle Gross weight	1,165	Kg

BOM LIST PER SADDLE

* PART NAME	t	W	L	Q'TY	N/WT(Kg)	G/WT (Kg)
* WEB	16	1,268	3,526	1	222	562
* SADDLE PAD	16	350	4,331	1	190	200
* BASE PLATE	25	300	3,300	1	194	204
* RIB,R1	16	129	250	2	8	9
* RIB,R9	16	274	1,268	2	87	92
* RIB,Rn1	16	129	270	4	17	18
* RIB,Rn2	16	129	328	4	21	22
* RIB,Rn3	16	129	428	4	28	29
* RIB,Rn4	16	129	578	4	37	39
* RIB,Rn5	0	0	0	0	0	0
* RIB,Rn6	0	0	0	0	0	0
* RIB,Rn7	0	0	0	0	0	0

TYPE-1

MENU PAGE-->>

Copyright © 2001 피이에스21 All rights reserved.
Please contact E-mail ***pes21@pes21.com***